LEVER AUTOMATION
IN WALK BEHIND ROLLERS

Aditi Jha

PROBLEM STATEMENT

An automated control system should be designed for the Walk-Behind Roller (WBR) to enhance operational efficiency and reduce manual intervention. The system should be capable of performing the following tasks:

1. Move forward at 0–4.5 km/h for a set distance, then pause in neutral.
2. Reverse to the starting point, pause, and repeat until the total distance is covered.
3. Use vibration Mode 1 during forward motion and Mode 2 during reverse.

MY UNDERSTANDINGS

Direction Lever

Vibration Lever

Position of Lever in WBR

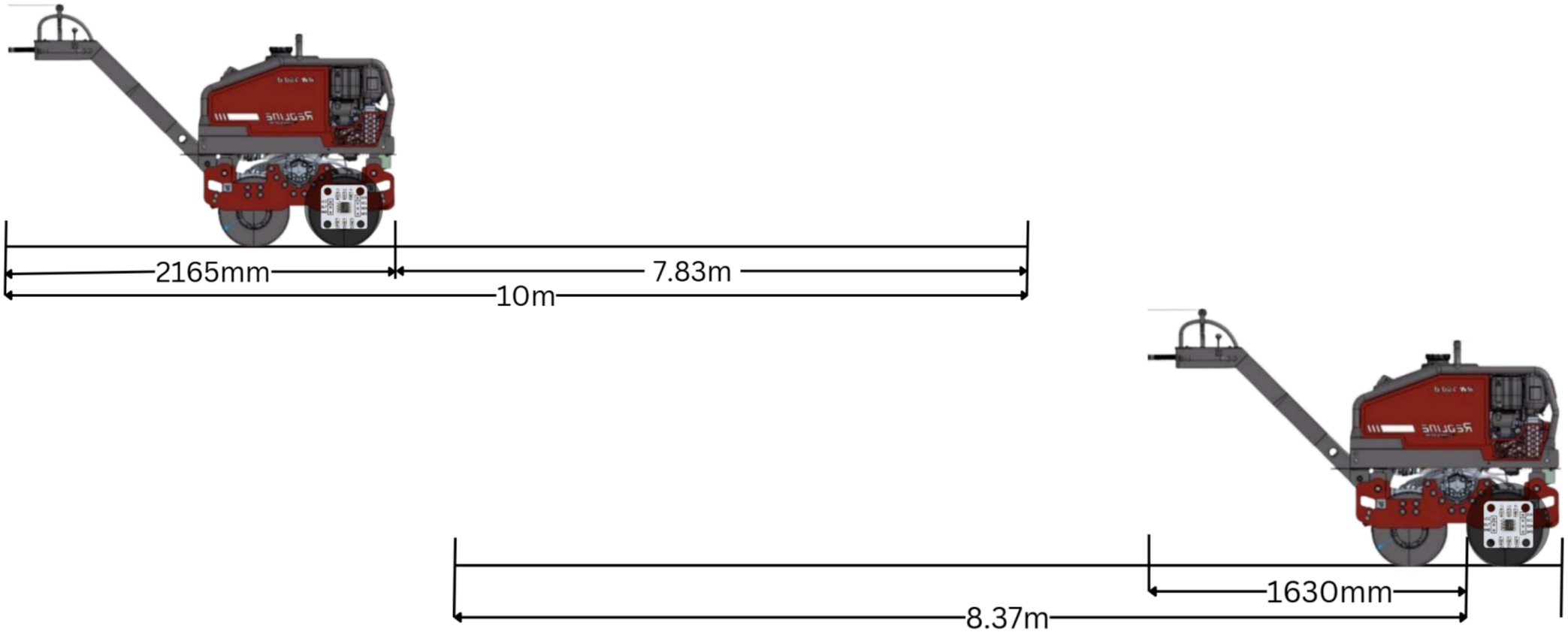

Distance to be covered in Forward and Reverse direction respectively

Forward *Reverse*

Direction Lever Dimensions and Movement

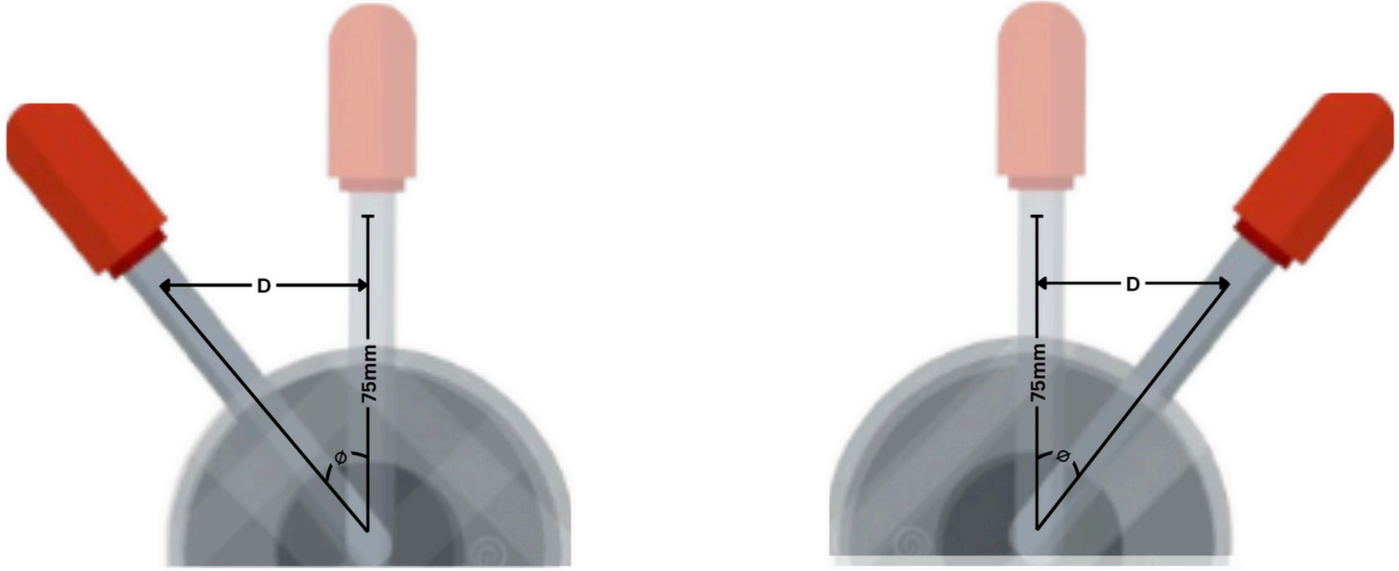

Forward *Reverse*

Vibration Lever Dimensions and Movement

PROPOSAL OF IDEAS

YokeDrive:Stepper-Based Automation

The YokeDrive system focuses on utilizing high-torque stepper motors coupled with a custom-built Scotch yoke mechanism. Yoke Drive is an ideal for scenarios requiring fine-tuned movements and precise control over lever movements.

Key Features

- Automated Lever Movements
- Real-Time Feedback
- Control Systems

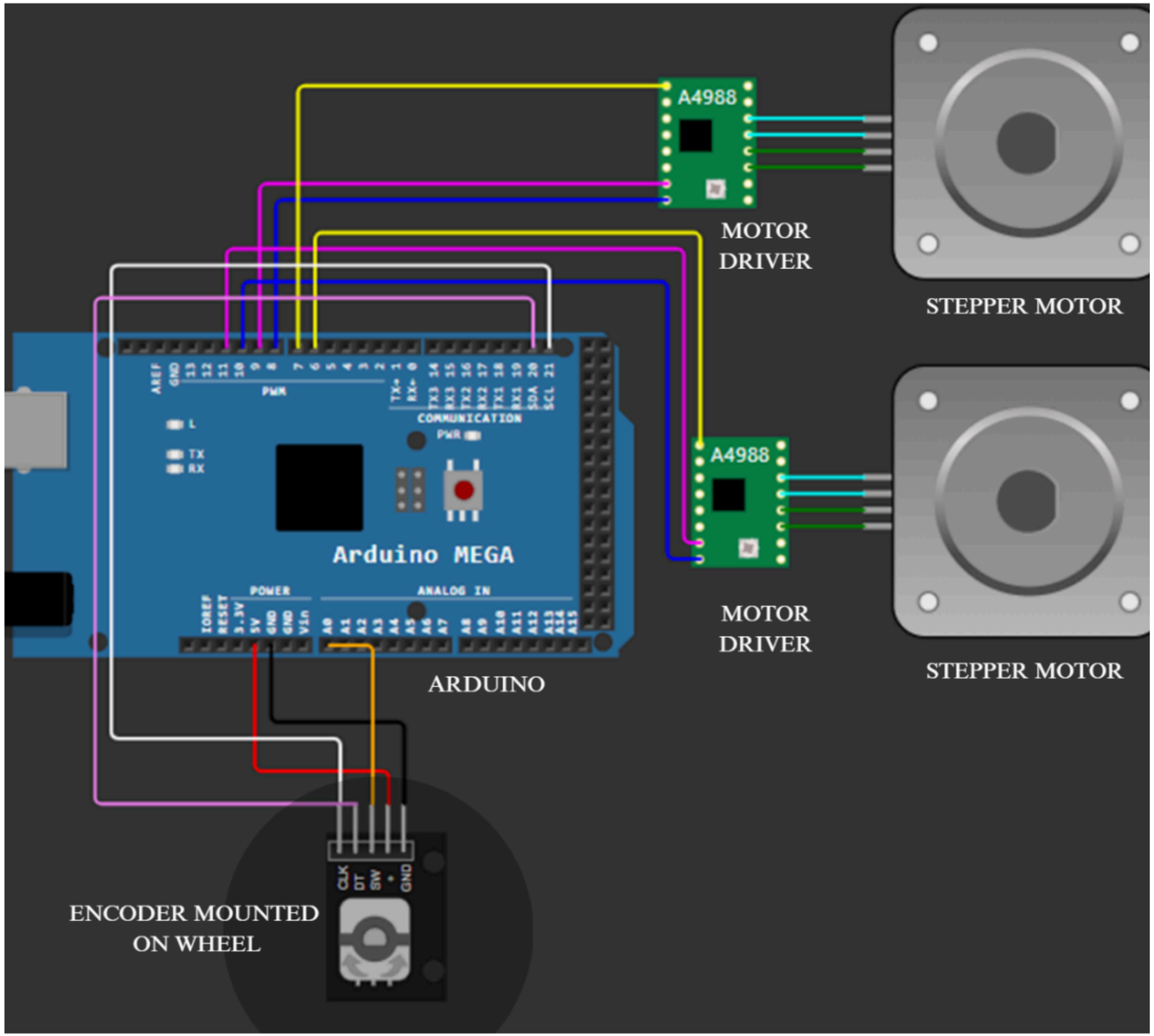

Circuit Diagram

Motion Transfer Mechanism

The stepper motor will be mechanically linked to the Scotch Yoke Mechanism, where its rotary will be converted into linear motion. The Scotch Yoke, in turn, will be connected to the lever via a series of precision-engineered links. This configuration ensures efficient transfer of motion from the motor to the lever, enabling accurate and repeatable lever operation.

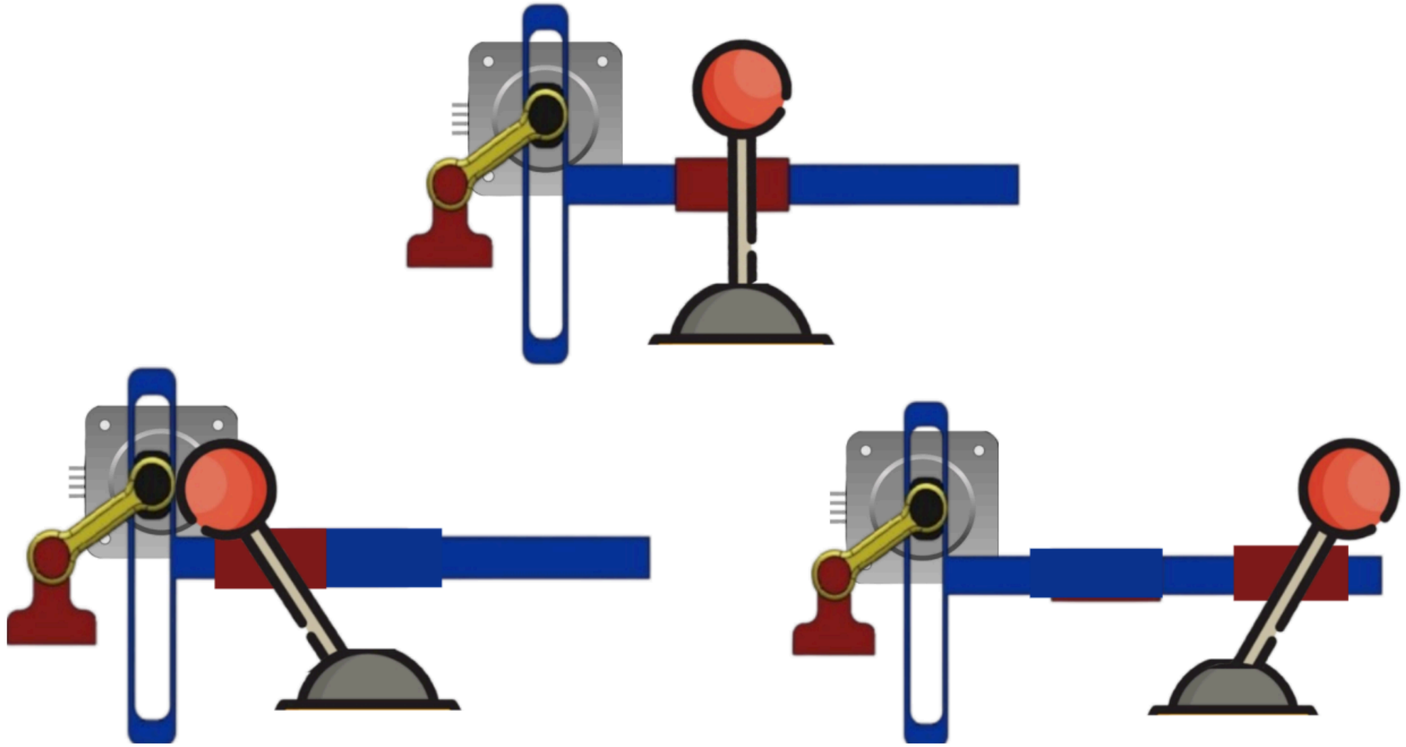

Neutral, Forward and Reverse Motion

Actuators: Relay-Driven Automation

This approach leverages linear actuators controlled via relays to achieve automated lever movement. The system employs a straightforward design that ensures reliability and ease of implementation. With relays managing actuator operations, the idea provides a cost-effective and and durable solution for automating the WBR's levers.

Key Features

- Automated Lever Movements
- Real-Time Monitoring with Encoder
- Simplified Control System
- Vibration Mode Control

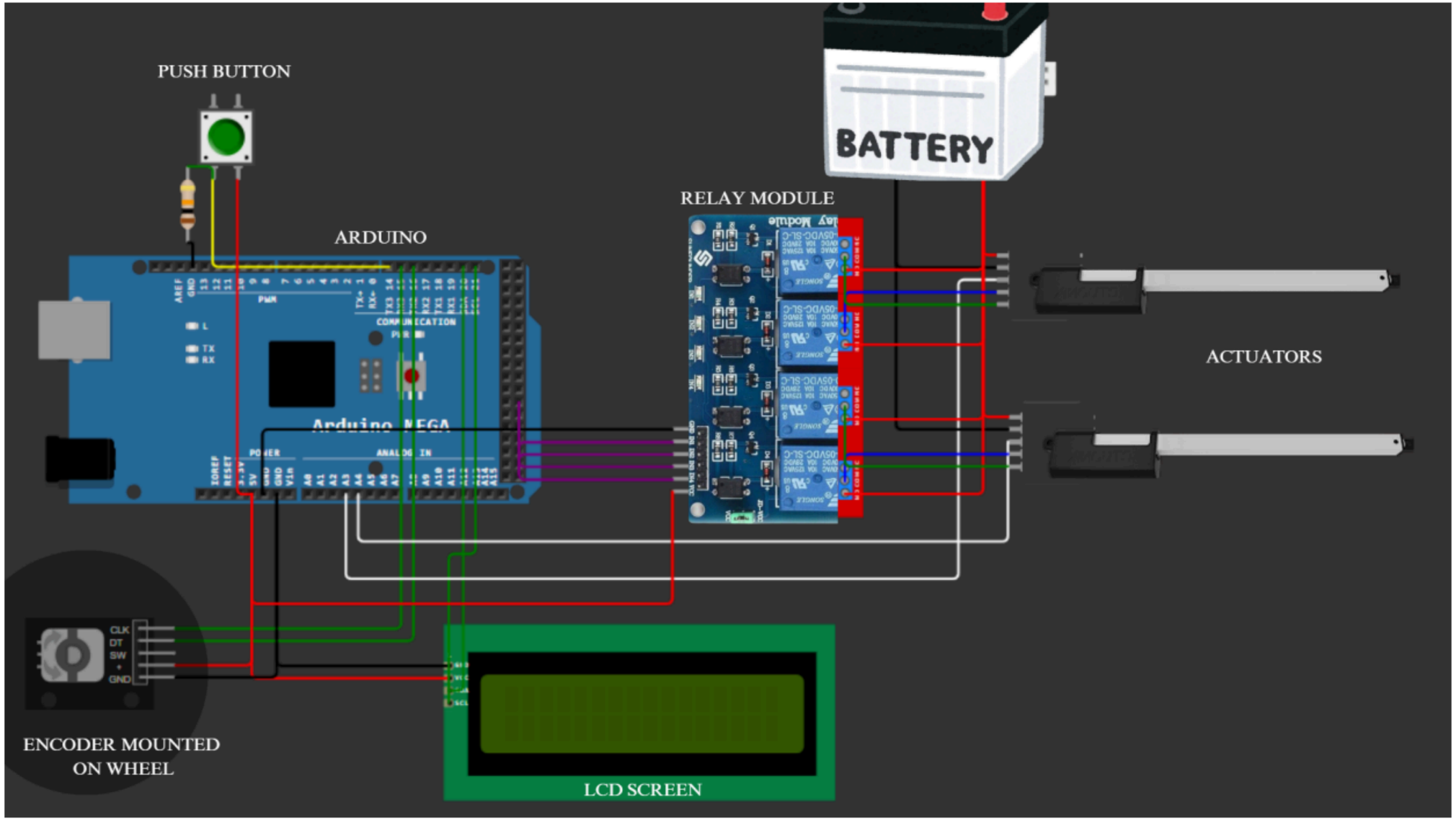

Circuit Diagram

Motion Transfer Mechanism

The linear actuator is securely mounted using clevis mounts, which provide a pivoting connection for smooth motion transfer. The actuator's shaft is linked to the clevis, which is attached to the lever arm, ensuring efficient force transmission. As the actuator extends or retracts, the clevis mount pivots to accommodate the lever's motion, moving it between Neutral, Forward, and Reverse positions. This setup ensures precise, repeatable lever operation while minimizing mechanical stress and enhancing system reliability through accurate and controlled motion.

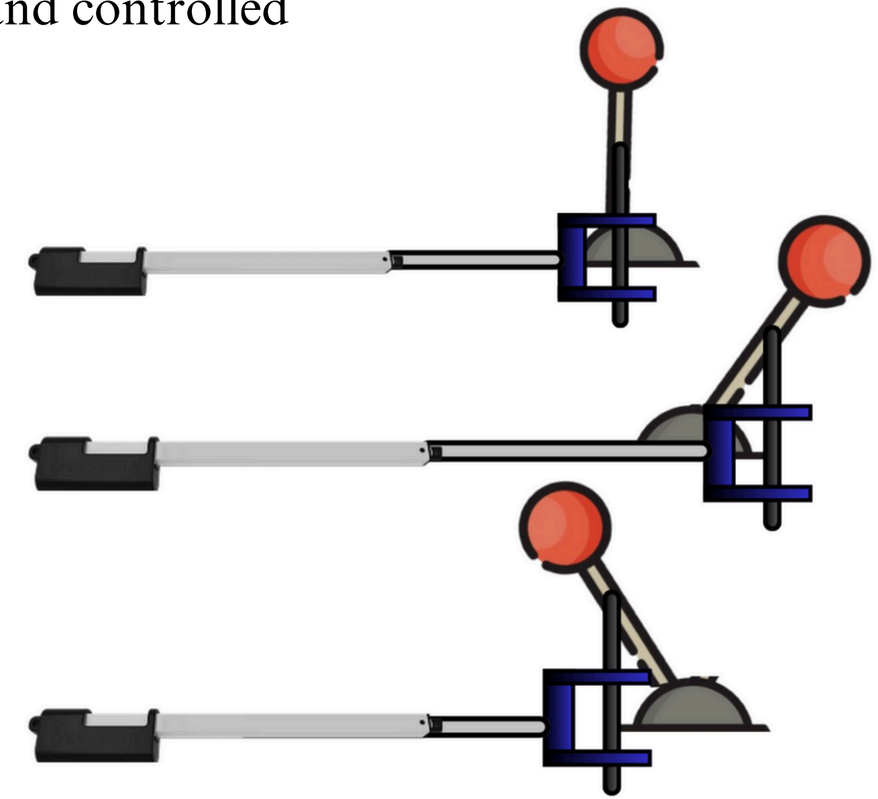

Neutral, Forward and Reverse Motion

SEQUENCE OF OPERATION

1.Relay 3 HIGH (VBM1) for 2 seconds

2.Relay 1 HIGH (Forward direction) for covering the forward distance

3.Relay 3 LOW (Neutral position)

4. Relay 1 LOW (Neutral position)

5. Pause for 5 seconds

6. Relay 4 HIGH (VBM2) for 2 seconds

7. Relay 2 HIGH (Reverse direction) for covering the reverse distance

8. Relay 4 LOW (Neutral position)

9. Relay 2 LOW (Neutral position)

ScotchDrive: Servo-Enhanced Motion

The ScotchDrive concept integrates high-precision servo motors with a Scotch yoke mechanism to achieve automated lever control. By ensuring smooth and responsive operation, ScotchDrive is tailored for scenarios requiring adaptive control and enhanced performance.

Key Features

- Precision Lever Control
- Efficient Motion Conversion
- Programmable Flexibility

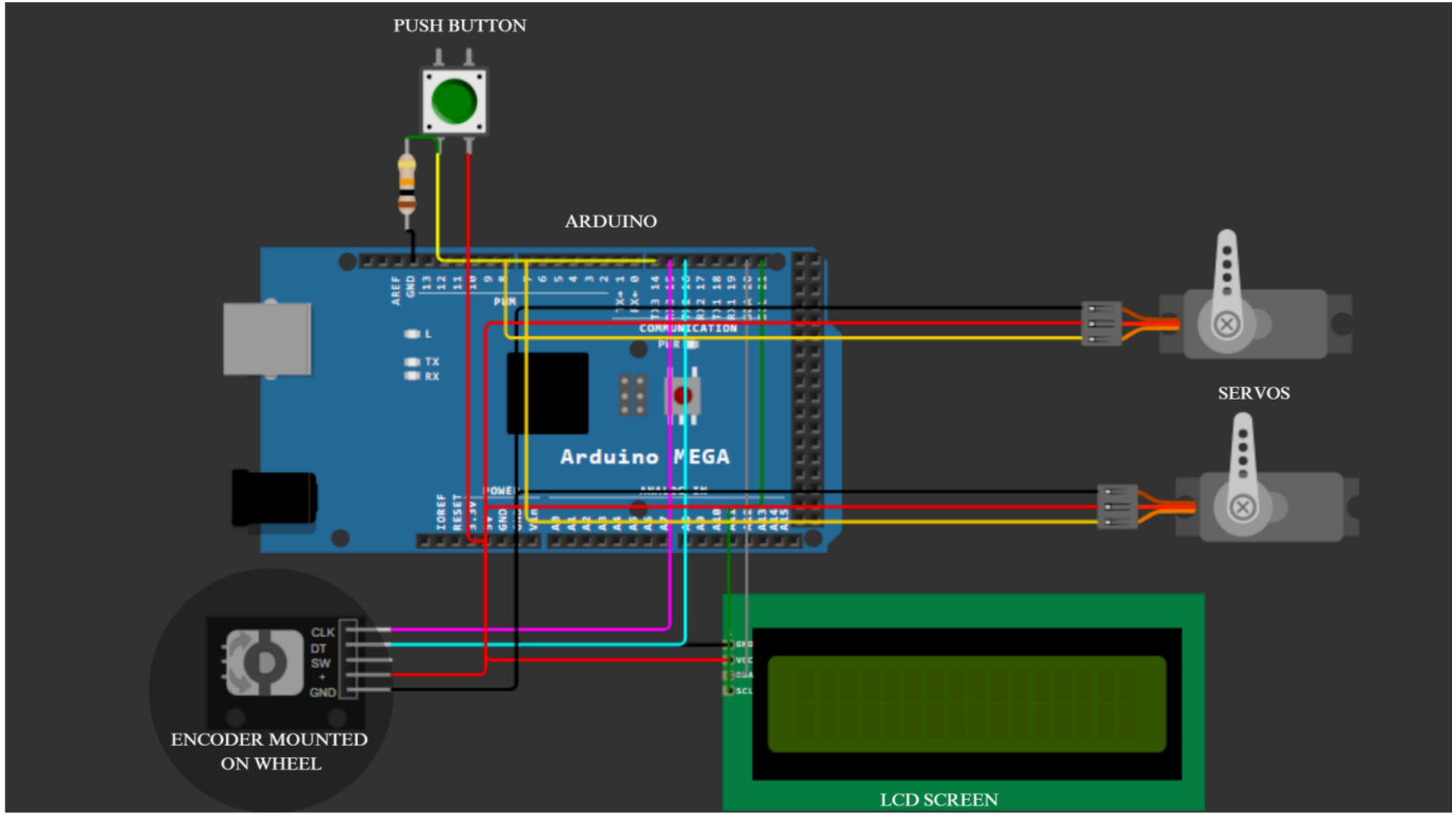

Circuit Diagram

Motion Transfer Mechanism

The servo motor will be linked to the Scotch yoke mechanism, where its rotary motion is converted into precise linear motion. The Scotch yoke assembly, connected to the servo, will transfer this linear motion through a set of precision-engineered linkages. These linkages connect the yoke to the Directional Lever (DL) and Vibration Lever (VB), ensuring smooth, accurate, and repeatable lever movement. This setup enables efficient and controlled motion transfer,
allowing the levers to be positioned accurately for directional and vibration control of the machine.

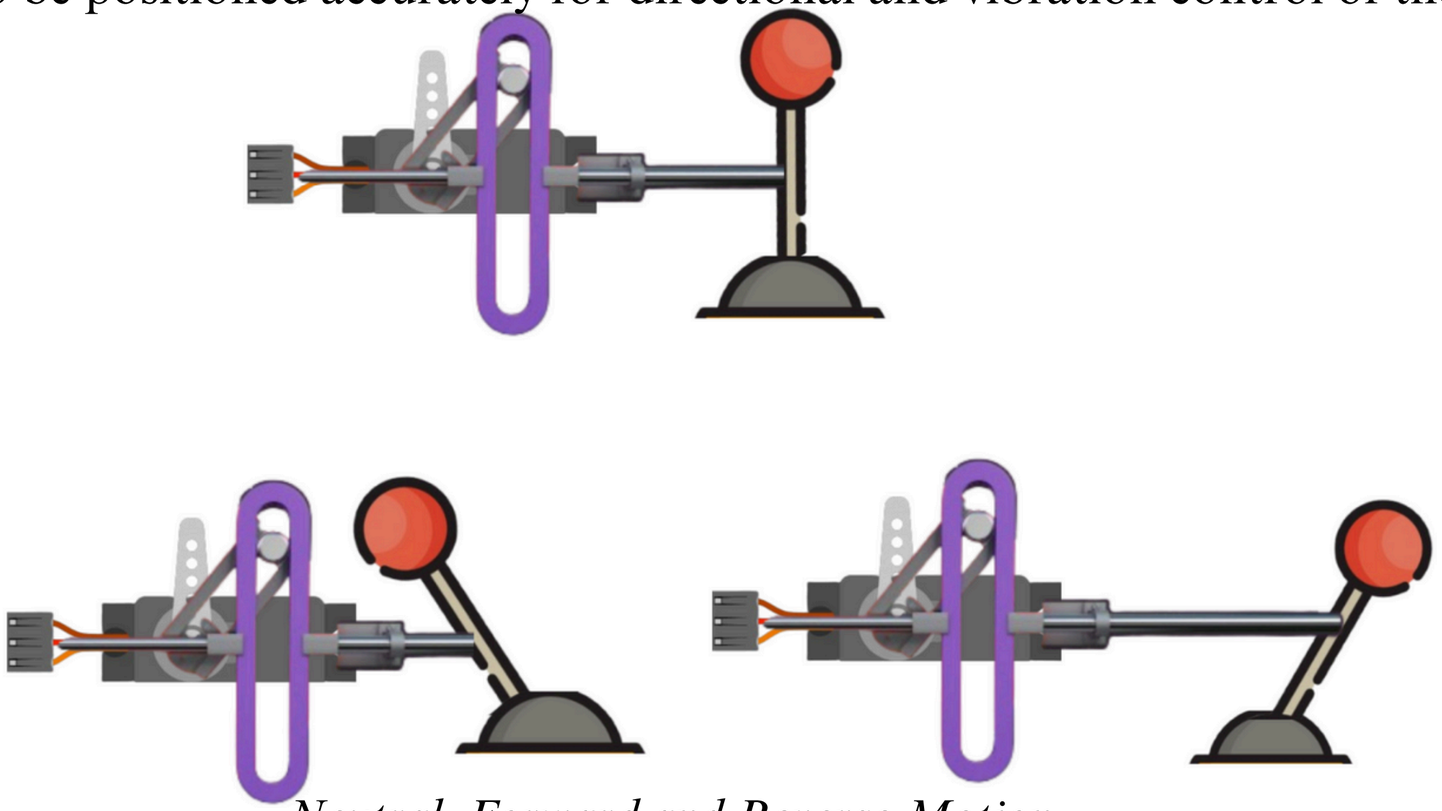

Neutral, Forward and Reverse Motion

THANK YOU

Aditi Jha